Bentotex GCL Installation Guide

What is Bentotex GCL?

Bentotex is a Geosynthetic Clay Liner; GCL for short. It is a innovative composite product manufactured using the naturally occurring Bentonite clay resource. The powdered Bentonite clay is sandwiched between a woven and a non woven geotextile to give a very robust high strength product.

The Bentonite clay gives the Bentotex it's unique 'self-healing' properties. Once the product is hydrated and confined under the required 300mm of cover material; if the product is punctured by an object Bentotex seals around it healing itself. This is one of the main reasons it is specified for a large proportion of public works contracts; as it is a 'fit it and forget it' solution.

The installation of the material is not dependant on prevailing weather conditions, and unlike manmade (HDPE / LDPE / Rubber) liners, it can be laid in cold inclement conditions. One of our case studies actually shows it being laid with snow on the ground. The material needs no specialist welding or even the availability of power on site during installation there by offering a large saving on labour and plant costs.

Stormwater Management Limited, Fleming Road, Harrowbrook Industrial Estate , Hinckley, Leicestershire, LE10 3DU Tel: 01455 502222 Fax: 01455 502223 Email: sales@storm-water.co.uk

Bentotex GCL Installation Guide

This document is intended for use as a GENERAL GUIDELINE for the installation of GCLs. Exceptions to this guideline may be required to address site-specific and/or product-specific conditions.

1 INTRODUCTION

1.1 This document provides procedures for the installation of GCLs in a manner that maximizes safety, efficiency, and the physical integrity of the GCL.

1.2 These guidelines are based upon several years of experience at a variety of sites and should be generally applicable to any type of lining project using GCLs.

1.3 The performance of the GCL is wholly dependent on the quality of its installation. It is the installer's responsibility to adhere to these guidelines, and to the project specification and drawings, as closely as possible. It is the engineer's and owner's responsibility to provide construction quality assurance (CQA) for the installation in order to ensure that the installation has been executed properly. This document covers only installation procedures.

2 EQUIPMENT REQUIREMENTS

2.1 GCLs are in rolls weighing from 1190-1,320 kg. It is necessary to support this weight using an appropriate core pipe as indicated in Table 1. For any installation, the core pipe must not deflect more than 75 mm as measured from end to midpoint when a full GCL roll is lifted.

Product	Nominal GCL Panel Size, Length x Width (m)	Typical GCL Roll Wt.m lbs (kg)	Interior Core Size (mm)	Core Pipe, Length x Diameter (m x mm)	Minimum Core Pipe Strenth
Bentotex GCL	5 x 40	1190 and 1320	95	5.45 x 75	XXH

2.2 Lifting chains or straps each rated for at least twice the load of the GCL should be used in combination with a spreader bar made from an I-beam as shown in the cover illustration. The spreader bar ensures the lifting chains or straps do not chafe against the ends of the GCL roll, which must be able to rotate freely during installation. Details of a spreader beam and bar are available for sale or hire up upon request.

2.3 A front-end loader, backhoe, dozer, or other equipment can be furnished with the spreader bar and core bar. Alternatively, a forklift with a "stinger" attachment may be used for on-site handling and, in certain cases, installation. A forklift should not be used to lift or handle the GCL rolls.

2.4 When installing over certain geosynthetic materials, a 4-wheel all-terrain vehicle (ATV) can be used to deploy the GCL from behind. An ATV can be driven directly on the GCL provided that no sudden stops, starts, or turns are made.

2.5 Additional equipment needed for installation of GCL includes:

- Utility knives and spare blades (for cutting GCL).
- Granular bentonite or bentonite mastic (for overlapped seams of GCLs with needlepunched non-woven geotextiles and for sealing around structures and details).
- Waterproof tarpaulins (for temporary cover on installed material as well as for stockpiled rolls.
- Option chalk line marker to simplify bentonite placement at seams (when installing a GCL with needle punched non-woven geotextile components).

stormwater MANAGEMENT

Bentotex GCL Installation Guide

3 SUBGRADE PREPARATION

3.1 If the GCL is placed over an earthen subgrade, the surface must be compacted to at least 90 percent modified Proctor density or to the extent required by the project specifications. Engineer's approval of the subgrade must be obtained prior to installation. The finished surface must be firm and unyielding, without abrupt elevation changes, voids, cracks, ice, or standing water.

3.2 The subgrade surface must be free of vegetation, sharp-edged rocks, stones, sticks, construction debris, and other foreign material that could contact the GCL. The subgrade should be rolled with a smooth-drum compactor to remove any wheel ruts, footprints, or other abrupt grade changes. Furthermore, all protrusions extending more than 12 mm from the subgrade surface shall either be removed, crushed, or pushed into the surface with a smooth-drum compactor. The GCL may be installed on a frozen subgrade, but the subgrade soil in the unfrozen state should meet the above requirements.

4 UNLOADING

4.1 In most cases, GCLs are delivered on flatbed trucks. To unload the rolls from the flatbed, insert the core pipe through the roll. This may require removal of the core plug, which should be replaced after the roll is unloaded. Secure the lifting straps or chains to each end of the core pipe and to the spreader bar mounted on the lifting equipment. Hoist the roll straight up; make sure its weight is evenly distributed so that it does not tilt or sway when lifted.

4.2 GCLs are also occasionally delivered in closed shipping containers. To remove the roll from the container, it is best to utilize a forklift equipped with a "stinger" attachment. Guide the stinger as far as possible through the core and lift the roll up and out of the container.

5 INSTALLATION

5.1 GCL rolls should be taken to the working area of the site in their original packaging. Immediately prior to their deployment, the packaging should be carefully removed without damaging the GCL. The orientation of the GCL (i.e. which side faces up) may be important if the GCL has two different geotextiles. Unless otherwise specified, however, the GCL shall be installed such that the product name printed on one side of the GCL faces up.

5.2 Equipment which could damage the GCL shall not be allowed to travel directly on it. Acceptable installation, therefore, may be accomplished such that the GCL is unrolled in front of the backward-moving equipment (Figure 1). If the installation equipment causes rutting of the subgrade, the subgrade must be restored to its originally accepted condition before placement continues.

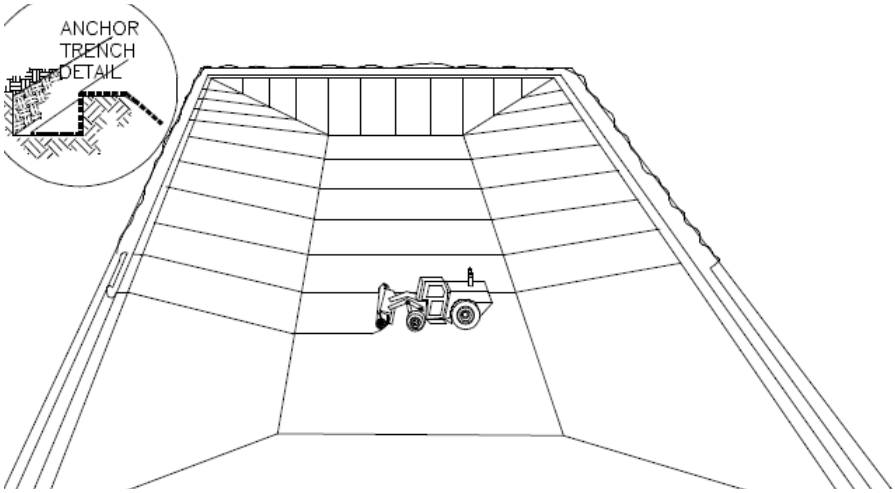

Typical Installation

stormwater MANAGEMENT

5.3 Care must be taken to minimize the extent to which the GCL is dragged across the subgrade in order to avoid damage to the bottom surface of the GCL. A temporary geosynthetic subgrade covering commonly known as a slip sheet or rub sheet may be used to reduce friction damage during placement.

5.4 The GCL should be placed so that seams are parallel to the direction of the slope. End-of-roll seams should also be located at least 1 meter from the toe and crest of slopes steeper than 4H:1V.

5.5 All GCL panels should lie flat on the underlying surface, with no wrinkles or folds, especially at the exposed edges of the panels.

5.6 For Bentotex, which is a reinforced GCL, the mat may remain uncovered for up to a week as the needle-punching effectively prevents any adverse effect of premature hydration. However, if the mat is wet, it should not be frequently walked on.

6 ANCHORAGE

6.1 If required by the project drawings, one end of the GCL roll should be placed in an anchor trench at the top of the slope. The front edge of the trench shall be rounded so as to eliminate any sharp corners that could cause excessive stress on the GCL. Loose soil should be removed or compacted into the floor of the trench.

6.2 Sufficient anchorage may alternately be obtained by extending the end of the GCL roll back from the crest of the slope. The length of this "runout" anchor is project-specific.

6.3 If a trench is used for anchoring the end of the GCL, soil backfill should be placed in the trench to provide resistance against pullout. The size and shape of the trench, as well as the appropriate backfill procedures, should be in accordance with the project drawings and specifications. Typical dimensions are shown in Figure 2.

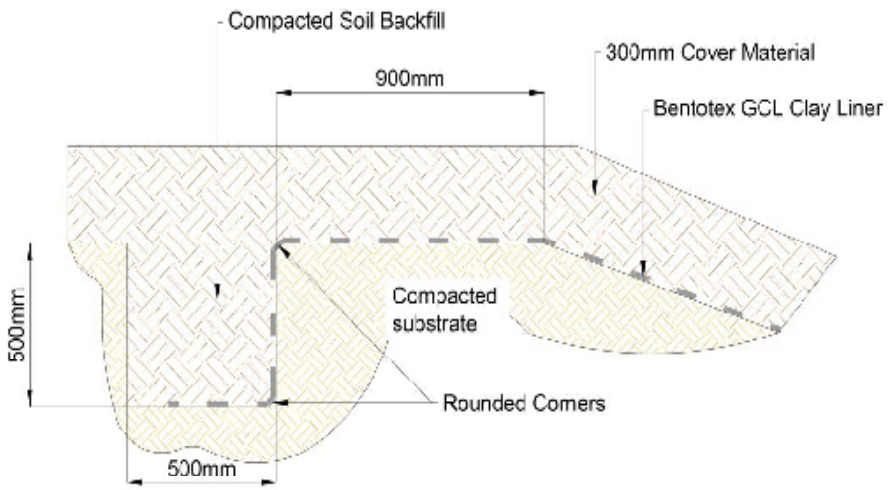

Figue 2. Typical Anchor Trench Location and Dimensions

6.3 The GCL should be placed in the anchor trench such that it covers the entire trench floor but does not extend up the rear trench wall.

stormwater MANAGEMENT

7 SEAMING

7.1 GCL seams are constructed by overlapping their adjacent edges. Care should be taken to ensure that the overlap zone is not contaminated with loose soil or other debris.

7.2 Unless otherwise specified, the minimum dimension of the longitudinal overlap should be 150 mm. End-of-roll overlapped seams should be similarly constructed, but the minimum overlap should measure 300 mm.

7.3 Seams at the ends of the panels should be constructed such that they are shingled in the direction of the grade to prevent the potential for runoff flow to enter the overlap zone.

7.4 Bentonite-enhanced seams are constructed first by overlapping the adjacent panels as instructed previously, then exposing the underlying edge, and then applying a continuous bead or fillet of granular sodium bentonite (supplied with the GCL) along a zone defined by the edge of the underlying panel and the 150mm line (Figure 3). The minimum application rate at which the bentonite is applied is 0.4 kg/m.

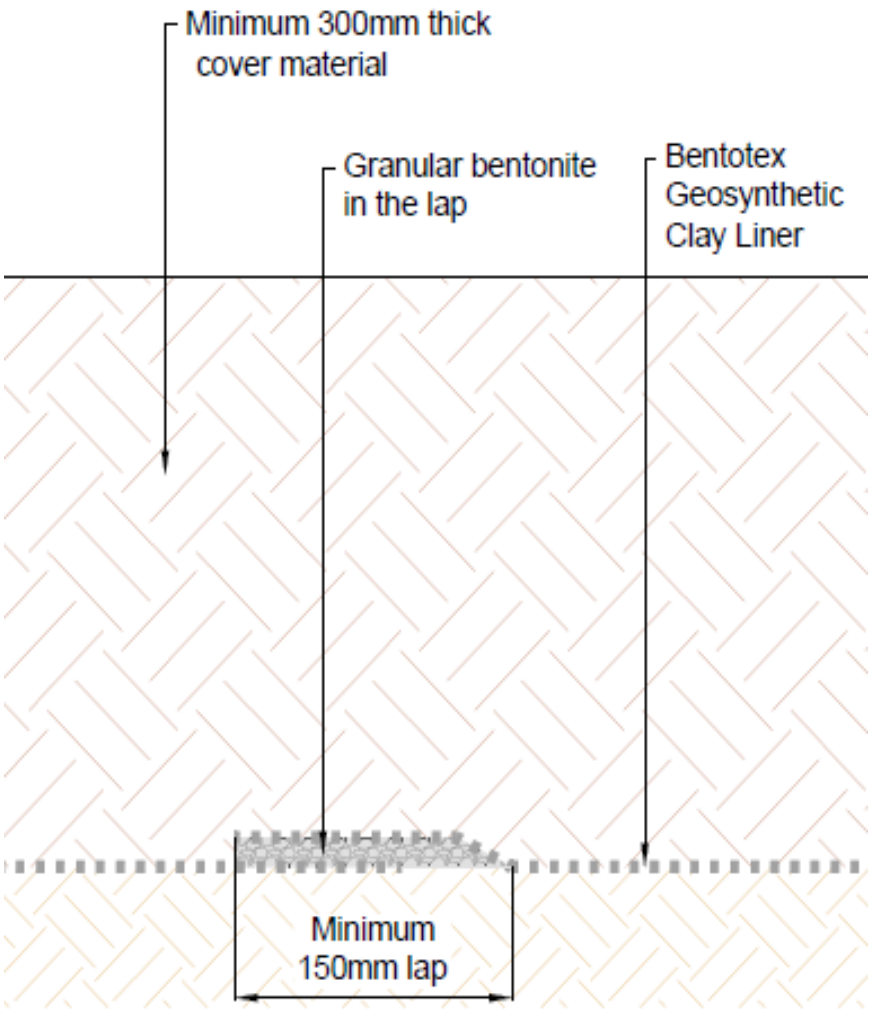

Figure 3. Bentonite-Enhanced Overlapped Seam

stormwater MANAGEMENT

8 SEALING AROUND PENETRATIONS AND STRUCTURES

8.1 Cutting the GCL should be performed using a sharp utility knife. Frequent blade changes are recommended to avoid irregular tearing of the geotextile components of the GCL during the cutting process.

8.2 The GCL shall be sealed around penetrations and structures embedded in the subgrade in accordance with Figures 4 through 6. Granular bentonite shall be used liberally (approximately 3 kg/m) to seal the GCL to these structures.

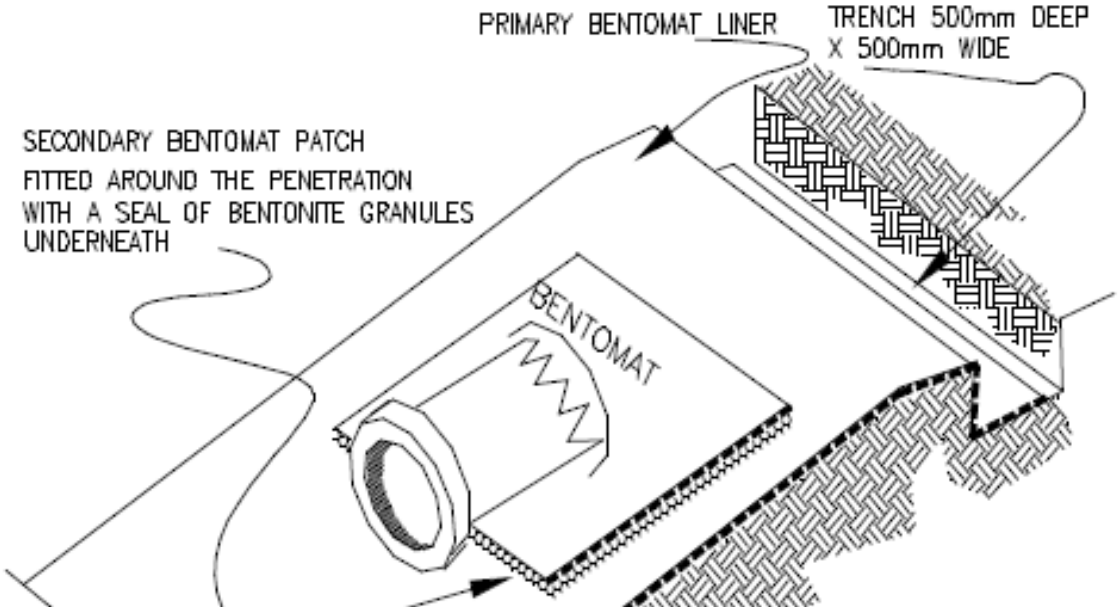

Figure 4a. Cross-Section of a Horizonal Pipe Penetration

8.3 When the GCL is placed over an earthen subgrade, a "notch" should be excavated into the subgrade around the penetration (Figure 4a). The notch should then be backfilled with granular bentonite.

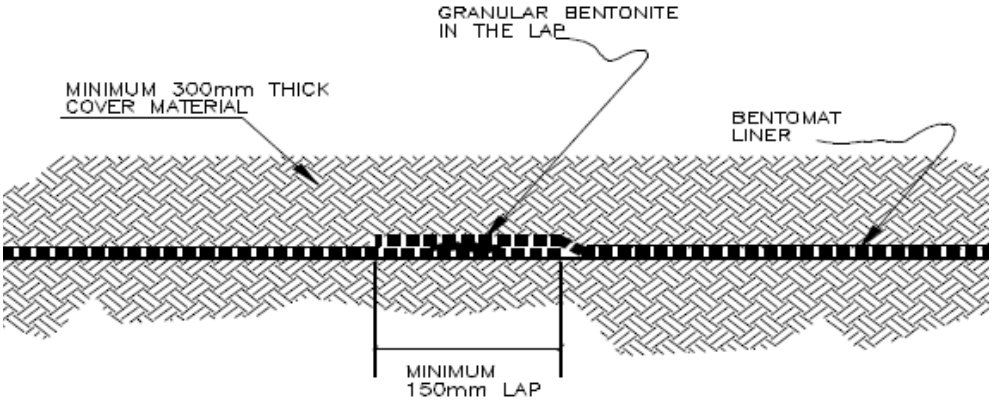

Figure 4b. Isometric view of completed Horizontal Pipe Penetration

stormwater MANAGEMENT

8.4 A secondary collar of GCL should be placed around the penetration as shown in Figure 4b. It is helpful to first trace an outline of the penetration on the GCL and then to cut a "star" pattern in the collar to enhance the collar's fit around the penetration.

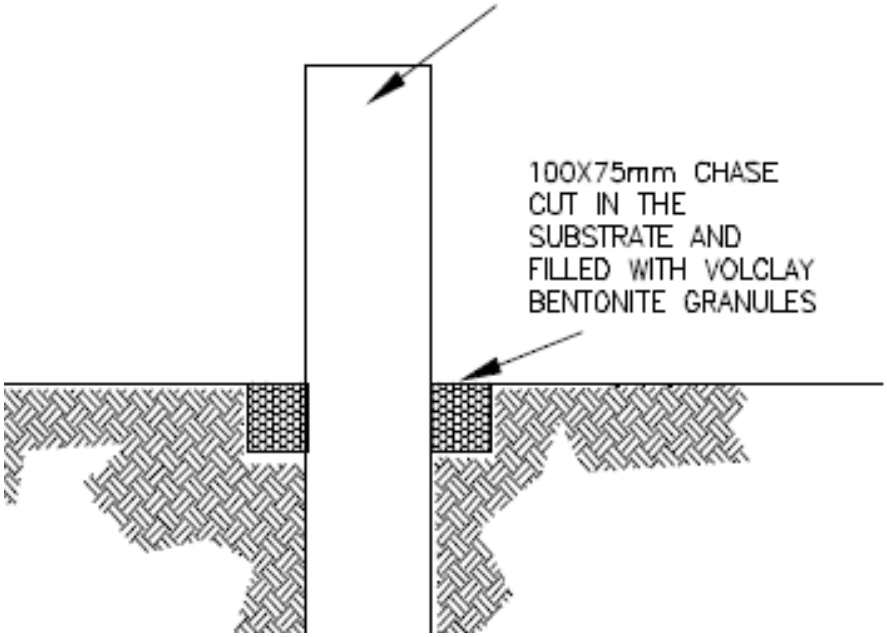

Figure 5a. Cross-section of a vertical penetration

8.5 Vertical penetrations are prepared by notching into the subgrade as shown in Figure 5a. The penetration is completed with two separate pieces of GCL as shown in Figure 5b. A secondary collar is optional in this case.

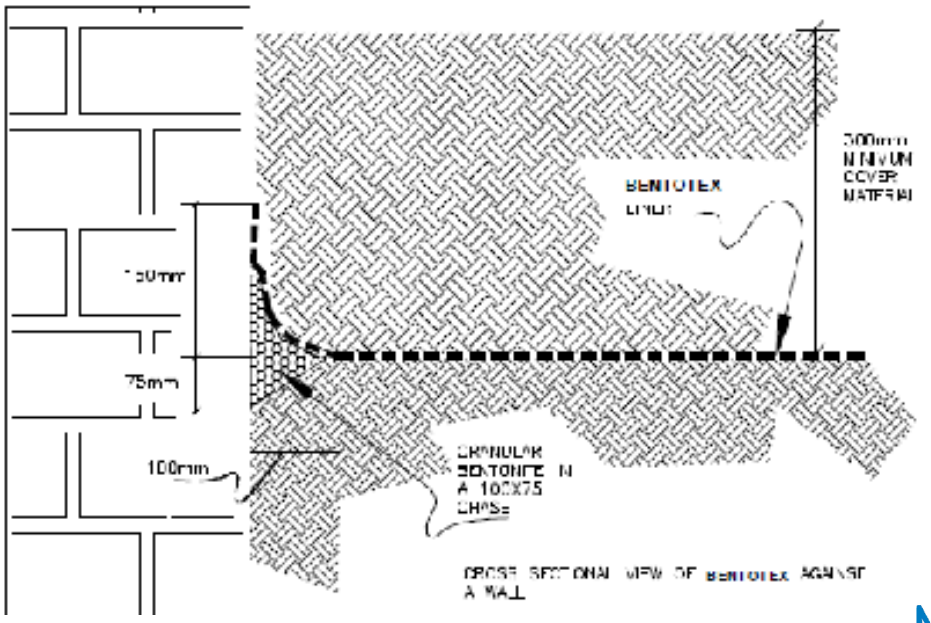

Figure 5b. Isometric view of completed vertical penetration

stormwater MANAGEMENT

8.6 When the GCL is terminated at a structure or wall that is embedded into the subgrade, the subgrade should be notched as described in Section 8.3 and 8.5. The notch is filled with dry granular bentonite, and the GCL should be placed over the notch and up against the structure. The connection to the structure can be accomplished by placement of soil or stone backfill in this area.

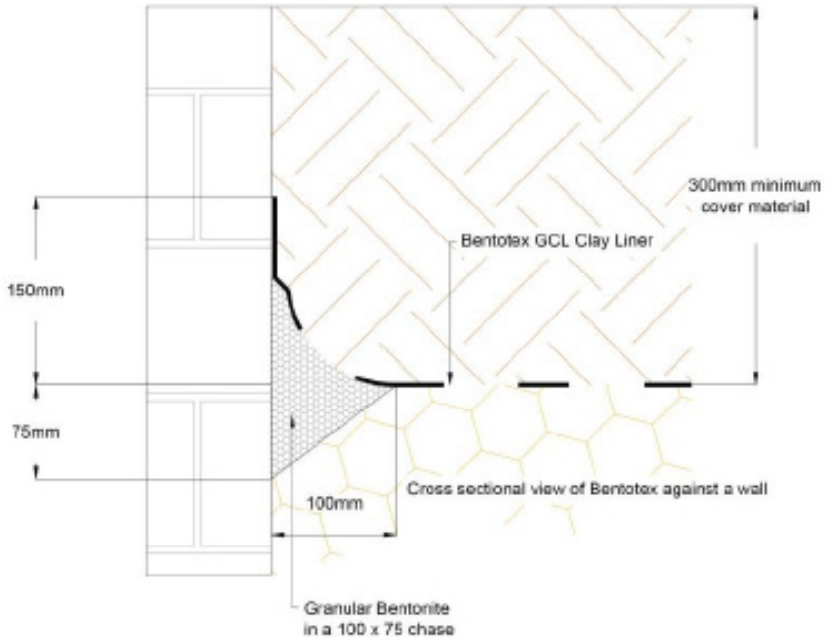

Figure 6. Cross-section of GCL against an embedded structure or wall

9 DAMAGE REPAIR

9.1 If the GCL is damaged (torn, punctured, perforated, etc.) during installation, it may be possible to repair it by placing a patch over the damaged area (Figure 7). The patch shall be obtained from a new GCL roll and shall be cut to size such that a minimum overlap of 300 mm is achieved around all parts of the damaged area Granular bentonite or bentonite mastic should be applied around the damaged area prior to placement of the patch. It may be necessary to use an adhesive such as wood glue to fix the patch in place so that it is not moved during cover placement. Smaller patches also may be tucked under the damaged area to prevent patch movement.

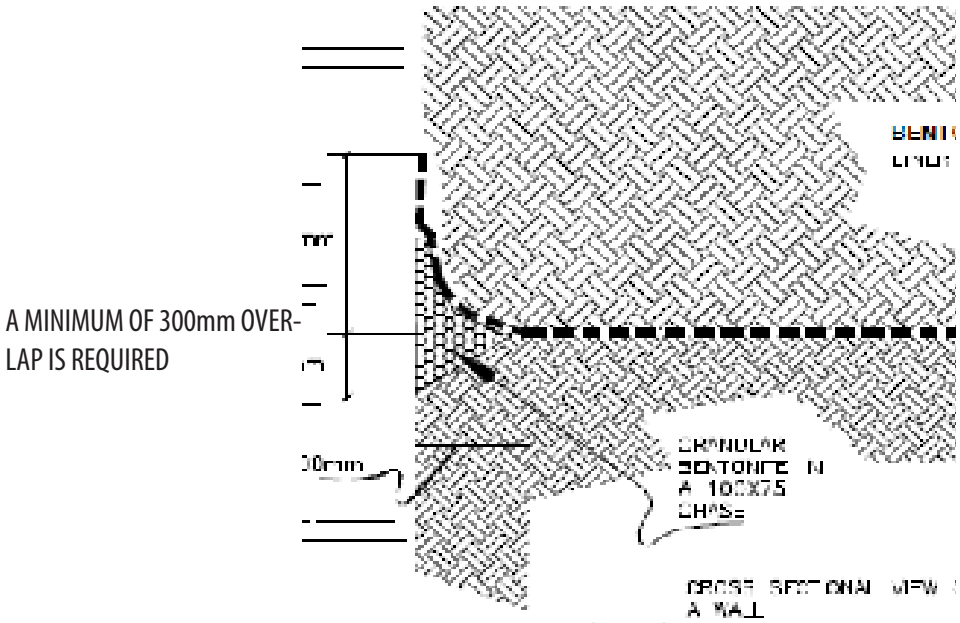

Figure 7. Damage repair by patching

10 COVER PLACEMENT

10.1 Cover soils shall be free of angular stones or other foreign matter which could damage the GCL. Cover soils should be approved by the Engineer, with respect to particle size, uniformity, and chemical compatibility.It is also the responsibility of the Design Engineer to check the chemical compatibility of the liner with the fluid to be contained.

10.2 Recommended cover soils typically have a particle size distribution ranging between fines and 25 mm. Soils with minimal fines or a high concentration of aggregate larger than 25 mm may require a field-scale test using the proposed subgrade surface, cover soil, and placement and compaction equipment. Following construction of the test pad, the GCL should be exhumed and inspected for any damage to the synthetic components of the GCL and for areas of visible bentonite displacement.

10.3 Soil cover shall be placed over the GCL using construction equipment that minimizes stresses on the GCL. A minimum thickness of 300 mm of cover should be maintained between the equipment tracks/tires and the GCL at all times during the covering process. This thickness recommendation does not apply to frequently trafficked areas or roadways, for which a minimum thickness of 600 mm is required.

10.4 The final thickness of soil cover on the GCL varies with the application, but this cover layer should be at least 300 mm thick to prevent damage by equipment, erosion, etc. Soil cover should be placed in a manner that prevents the soil from entering the GCL overlap zones.

10.5 Although direct vehicular contact with the GCL is to be avoided, lightweight, low ground pressure vehicles (such as 4-wheel all-terrain vehicles) may be used to facilitate the installation of geosynthetic products placed over the GCL. .

11 HYDRATION

11.1 In projects involving the containment of non-aqueous liquids (secondary containment around above-ground storage tanks), the GCL must be hydrated with clean water prior to use. The GCL does not function as a barrier until hydration takes place. Hydration is usually accomplished by natural rainfall if the GCL is covered by permeable material. If manual hydration is necessary,water can be introduced the use of a sprinkler system.

stormwater MANAGEMENT